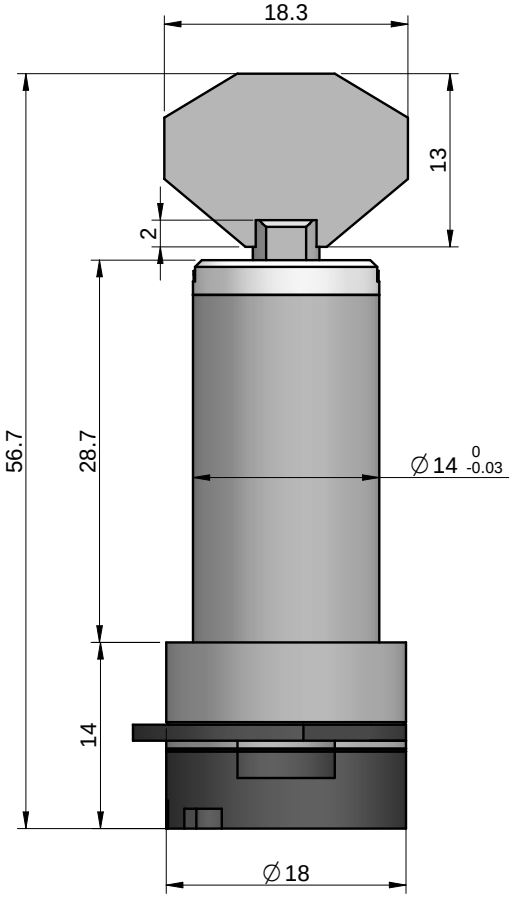
18.3
13
2
56.7
28.7
∅14 0 -0.03
14
∅18

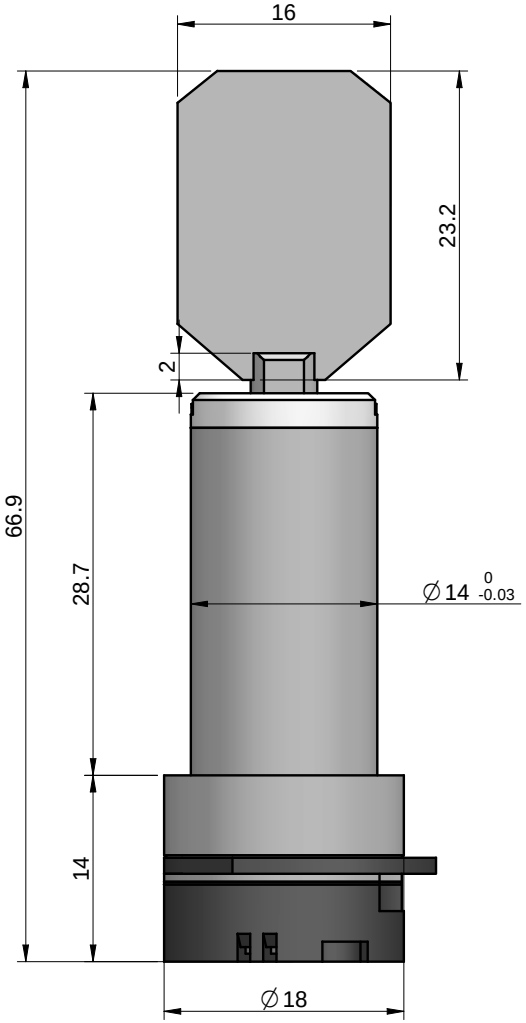
16
23.2
2
66.9
28.7
∅14 0 -0.03
14
∅18

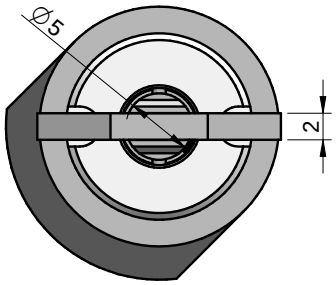
∅5
2

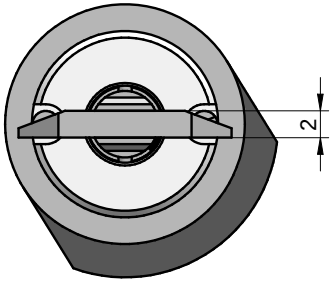
2