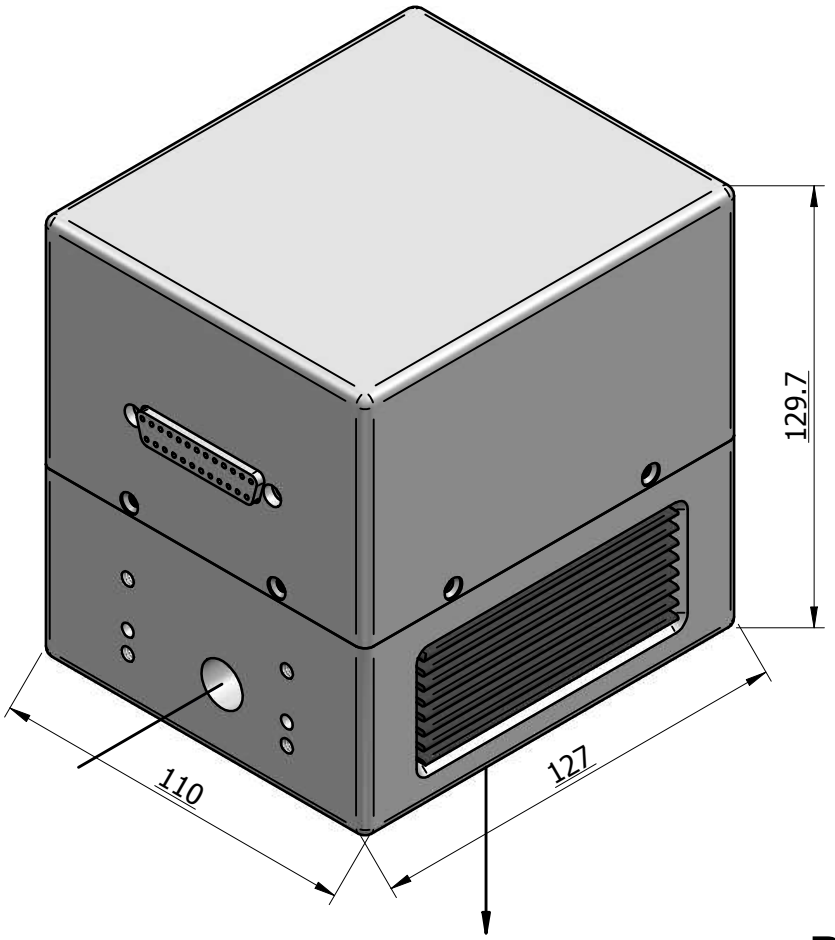
129.7
110
127

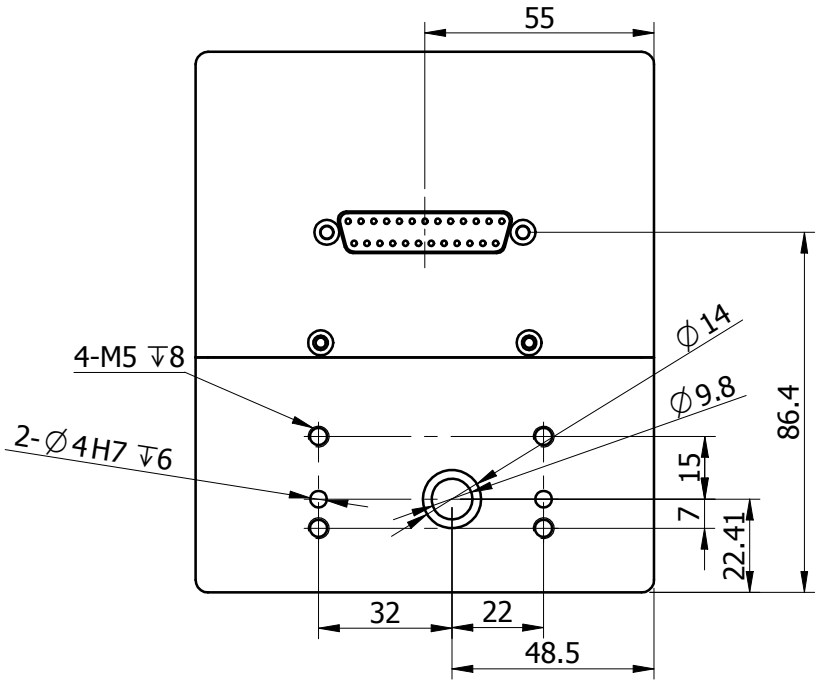
55
4-M5 ↧8
2-∅4H7 ↧6
∅14
∅9.8
86.4
15
7
22.41
32
22
48.5

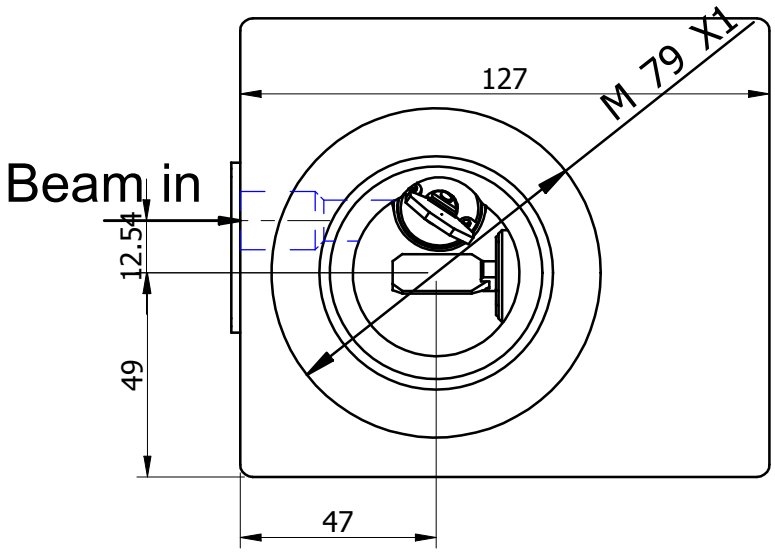
Beam in
127
M 79 X1
4
12.5
49
47